(1)VPROC_BB, GND pin of 1st cap group should be laid differential pair with ground shielding remote sense to PMIC

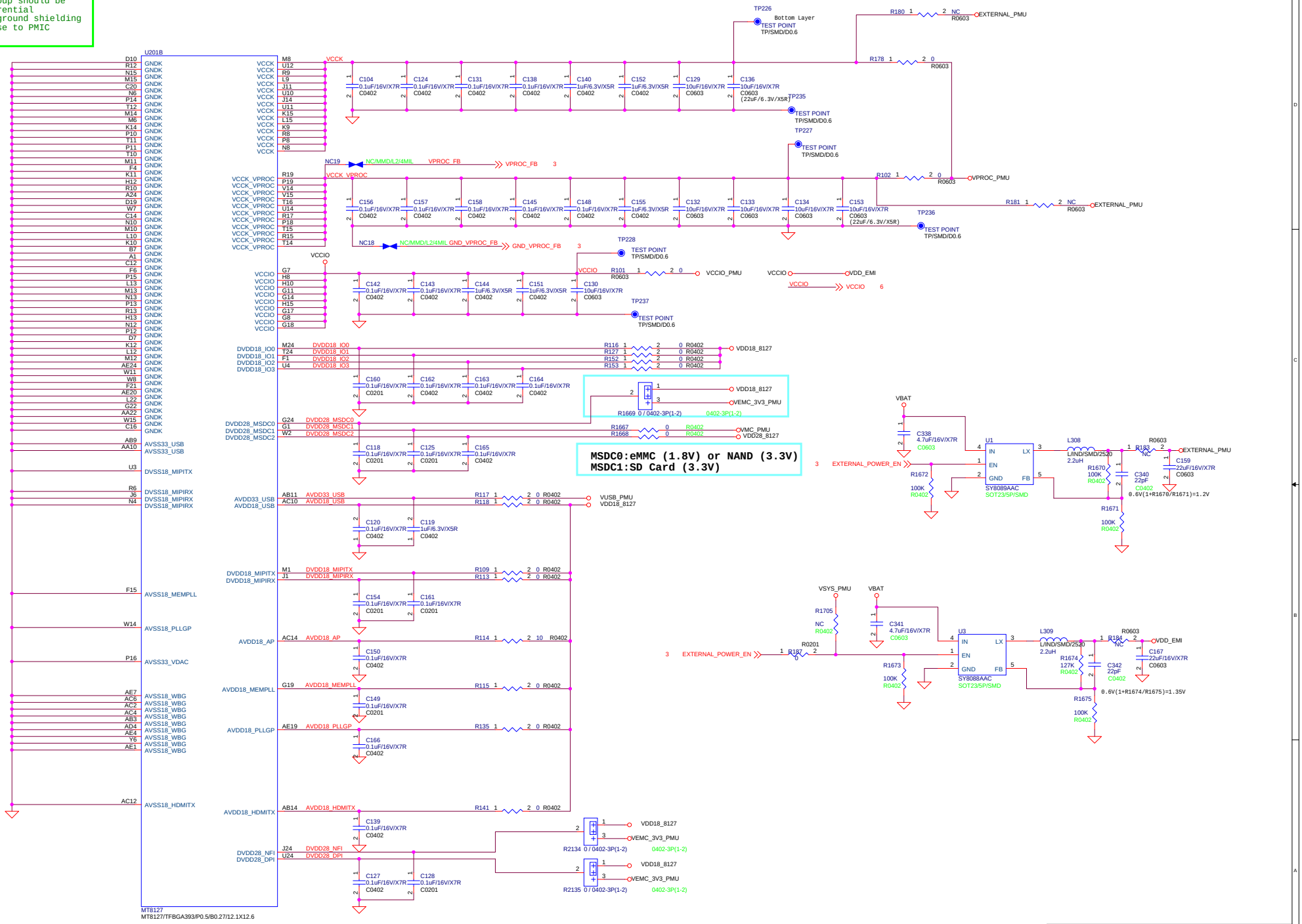

MEDIATEK

Title	01 MT8127 - Power	
Size C	Document Number MT8127 TABLET	Rev V1.0
Date: Wednesday, April 30, 2014	Sheet 1 of 18	

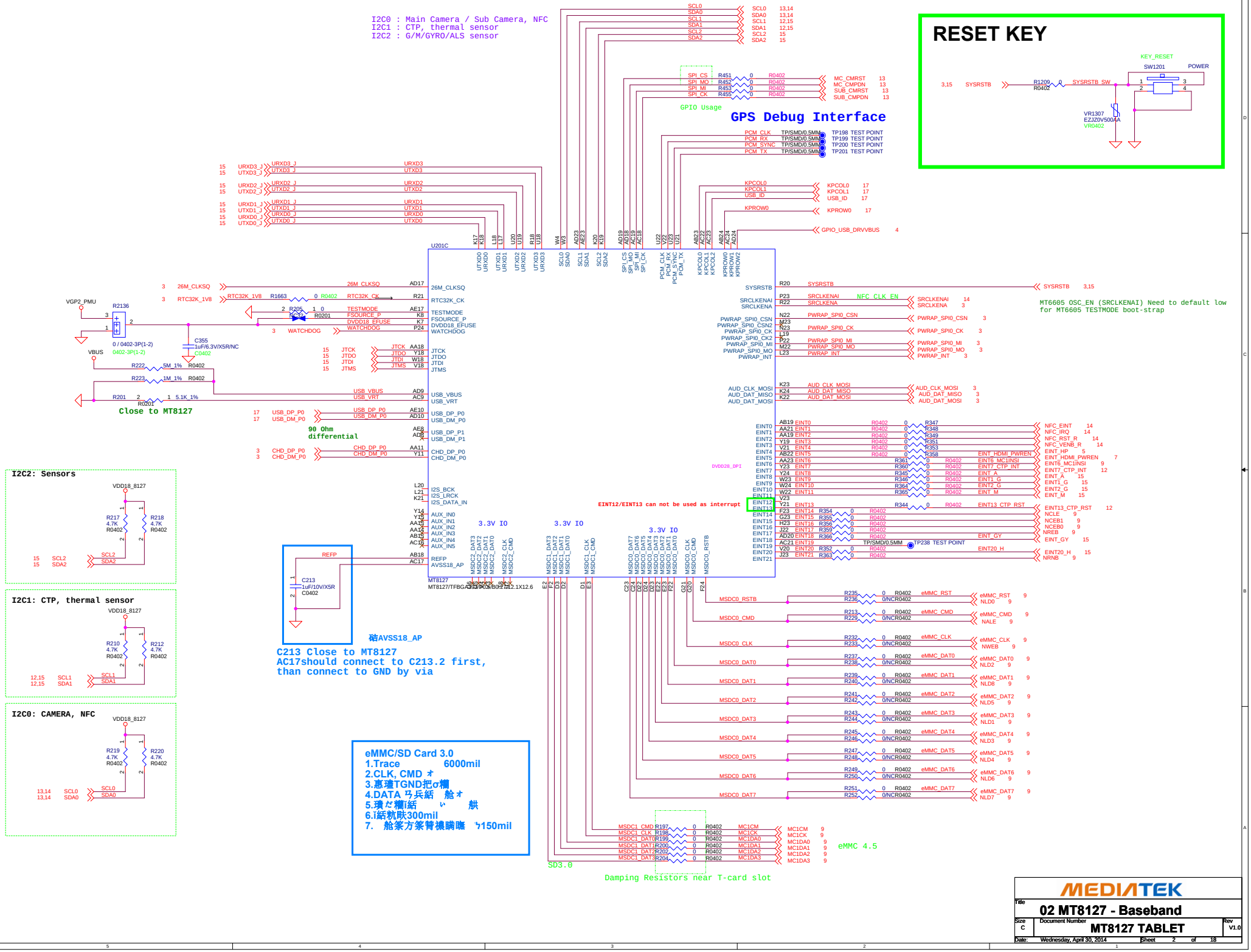
I2C0 : Main Camera / Sub Camera, NFC
I2C1 : CTP, thermal sensor
I2C2 : G/M/GYRO/ALS sensor
RESET KEY
KEY_RESET
SW1201
POWER
SYSRSTB
R1209
SYSRSTB_SW
VR1307
EZJZ0V500AA
VR0402
GPIO Usage
GPS Debug Interface
PCM_CLK
PCM_RX
PCM_SYNC
PCM_TX
TP198 TEST POINT
TP199 TEST POINT
TP200 TEST POINT
TP201 TEST POINT
KPCOL0
KPCOL1
USB_ID
KPROW0
GPIO_USB_DRVVBUS
U201C
MT8127
MT8127/TFBGA333/POS/B0/7.7x12.6
26M_CLKSQ
RTC32K_CK
TESTMODE
FSOURCE_P
DVDD18_EFUSE
WATCHDOG
JTCK
JTDO
JTDI
JTMS
USB_VBUS
USB_VRT
USB_DP_P0
USB_DM_P0
USB_DP_P1
USB_DM_P1
CHD_DP_P0
CHD_DM_P0
I2S_BCK
I2S_LRCK
I2S_DATA_IN
AUX_IN0
AUX_IN1
AUX_IN2
AUX_IN3
AUX_IN4
AUX_IN5
REFP
AVSS18_AP
SYSRSTB
SRCLKENAI
SRCLKENA
NFC_CLK_EN
PWRAP_SPI0_CSN
PWRAP_SPI0_CK
PWRAP_SPI0_MI
PWRAP_SPI0_MO
PWRAP_INT
AUD_CLK_MOSI
AUD_DAT_MISO
AUD_DAT_MOSI
EINT0
EINT1
EINT2
EINT3
EINT4
EINT5
EINT6
EINT7
EINT8
EINT9
EINT10
EINT11
EINT12
EINT13
EINT14
EINT15
EINT16
EINT17
EINT18
EINT19
EINT20
EINT21
DVDD28_DPI
EINT12/EINT13 can not be used as interrupt
3.3V IO
MT6605 OSC_EN (SRCLKENAI) Need to default low for MT6605 TESTMODE boot-strap
VGP2_PMU
R2136
0 / 0402-3P(1-2)
0402-3P(1-2)
C355
1uF/6.3V/X5R/NC
C0402
VBUS
R222 5M_1% R0402
R223 1M_1% R0402
R201 5.1K_1%
R0201
Close to MT8127
90 Ohm differential
C213
1uF/10V/X5R
C0402
REFP
硅AVSS18_AP
C213 Close to MT8127
AC17should connect to C213.2 first,
than connect to GND by via
I2C2: Sensors
I2C1: CTP, thermal sensor
I2C0: CAMERA, NFC
VDD18_8127
R217 4.7K R0402
R218 4.7K R0402
R210 4.7K R0402
R212 4.7K R0402
R219 4.7K R0402
R220 4.7K R0402
SCL2
SDA2
SCL1
SDA1
SCL0
SDA0
eMMC/SD Card 3.0
1.Trace 6000mil
2.CLK, CMD ォ
3.惠璶TGND把σ糰
4.DATA ㄅ兵紒 舱ォ
5.瓊だ糰l紒 い 舼
6.l紒軌眹300mil
7. 舱筡方筡胄禠瞵瞧 ㄅ150mil
MSDC0_RSTB
MSDC0_CMD
MSDC0_CLK
MSDC0_DAT0
MSDC0_DAT1
MSDC0_DAT2
MSDC0_DAT3
MSDC0_DAT4
MSDC0_DAT5
MSDC0_DAT6
MSDC0_DAT7
eMMC_RST
eMMC_CMD
eMMC_CLK
eMMC_DAT0
eMMC_DAT1
eMMC_DAT2
eMMC_DAT3
eMMC_DAT4
eMMC_DAT5
eMMC_DAT6
eMMC_DAT7
MSDC1_CMD
MSDC1_CLK
MSDC1_DAT0
MSDC1_DAT1
MSDC1_DAT2
MSDC1_DAT3
MC1CM
MC1CK
MC1DA0
MC1DA1
MC1DA2
MC1DA3
eMMC 4.5
SD3.0
Damping Resistors near T-card slot
MEDIATEK
Title
02 MT8127 - Baseband
Size C
Document Number
MT8127 TABLET
Rev V1.0
Date: Wednesday, April 30, 2014
Sheet 2 of 18

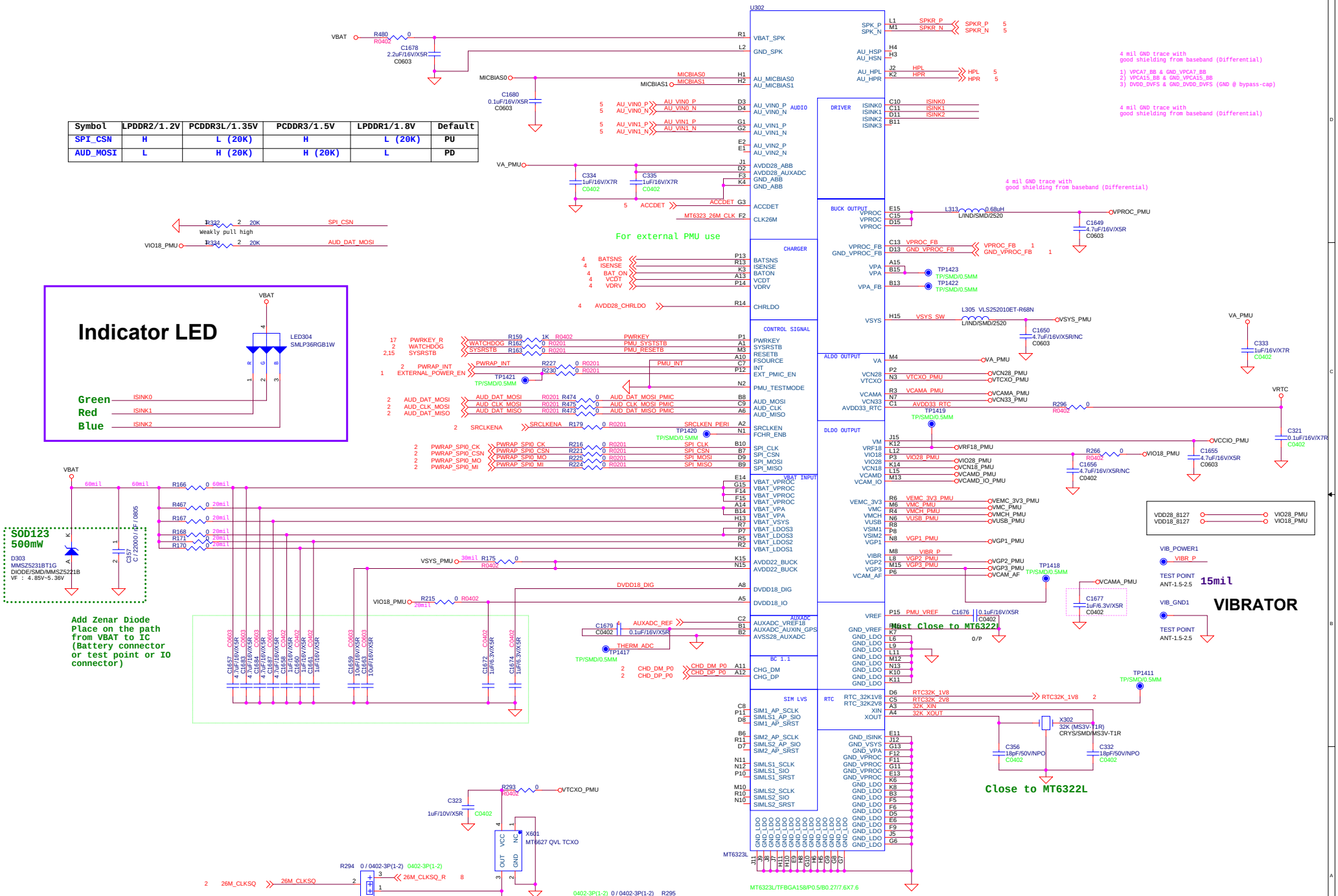

Symbol	LPDDR2/1.2V	PCDDR3L/1.35V	PCDDR3/1.5V	LPDDR1/1.8V	Default
SPI_CSN	H	L (20K)	H	L (20K)	PU
AUD_MOSI	L	H (20K)	H (20K)	L	PD

OTG Power

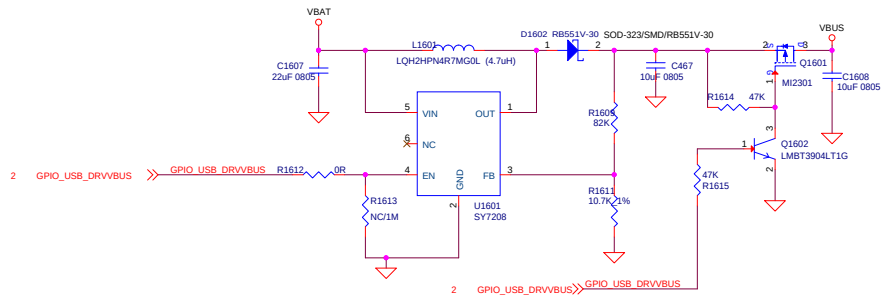

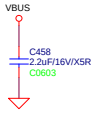

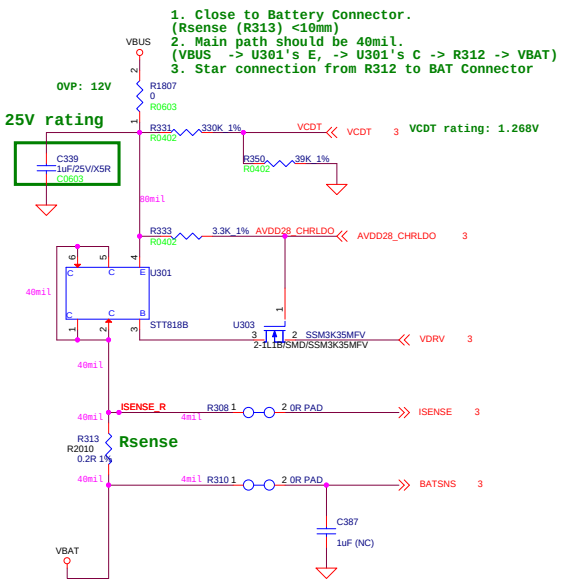

BATTERY CONNECTOR

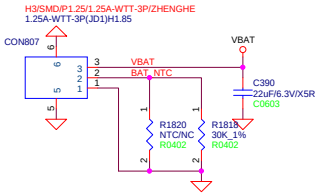

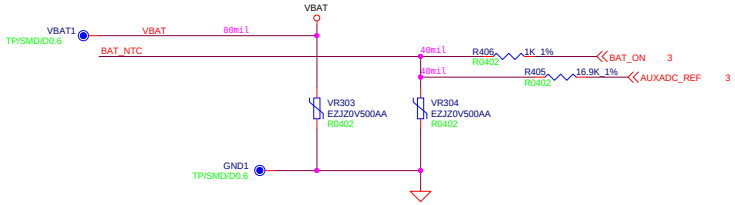

Thermal protection option 1: battery with NTC
(1) if battery NTC is 10kohm; R334=16.9K (+/-1%), R336=27K (+/-1%)
(2) if battery NTC is 47kohm; R334=61.9K (+/-1%), R336=100K (+/-1%)

Thermal protection option 2: battery without NTC
(1) Deletc R334, R336
(2) Use R331, NTC301 for thermal protection

緯 MT6323 AUXADC_VREF18 PIN,
and the path need shielding with GND

MEDIATEK

Title	04 CHR & OTG POWER	
Size C	Document Number MT8127 TABLET	Rev V1.0
Date: Wednesday, April 30, 2014	Sheet 4 of 18	

Speaker

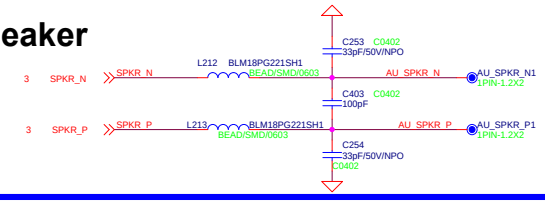

Earphone Audio

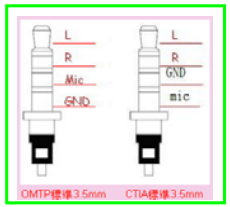

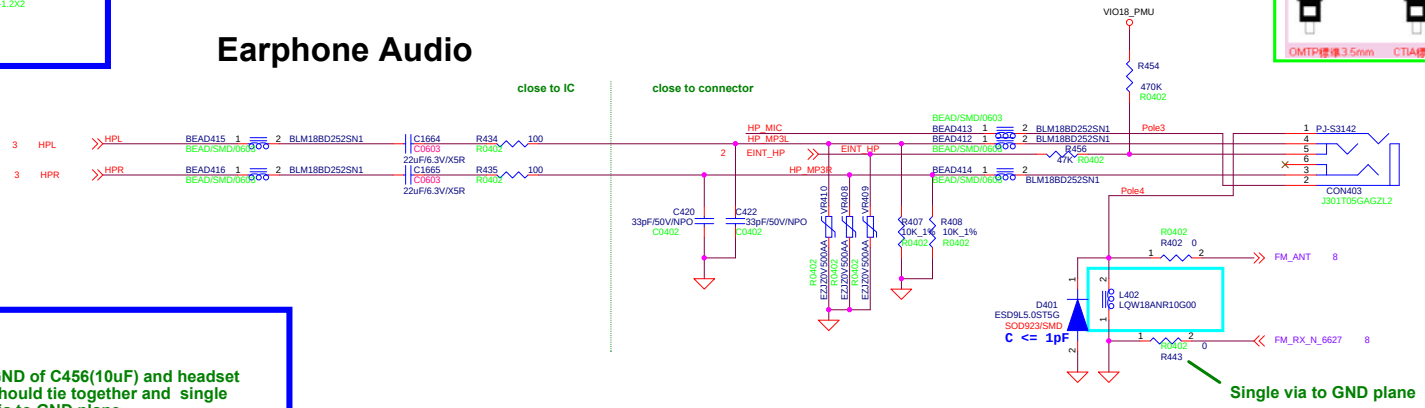

Earphone MICPHONE

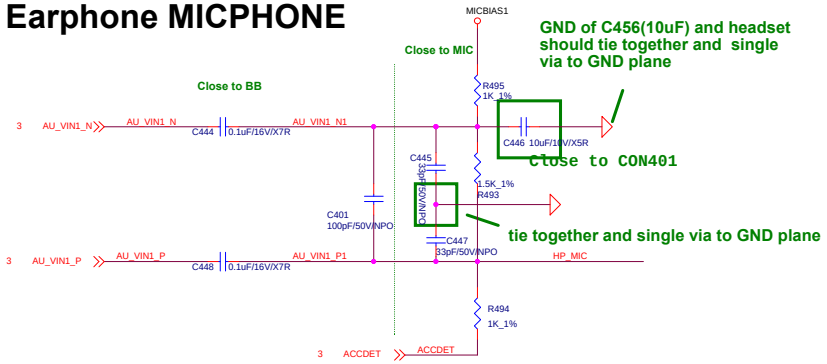

Handset Microphone 1

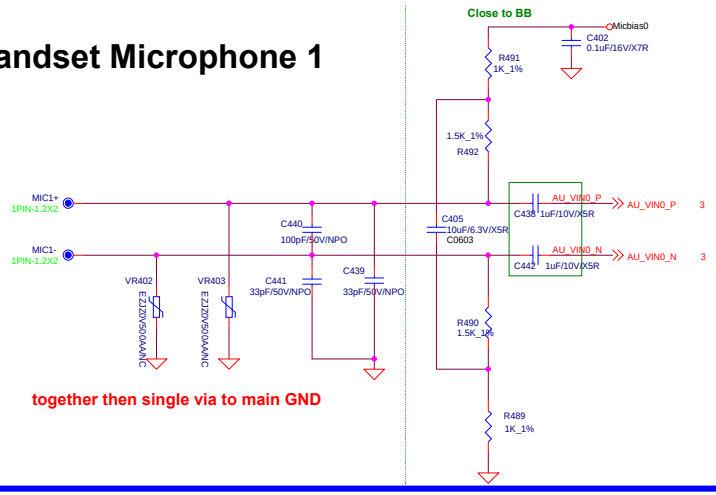

MEDIATEK

Title	05 MT8127 - Audio	
Size C	Document Number MT8127 TABLET	Rev V1.0
Date: Wednesday, April 30, 2014	Sheet 5 of 18	

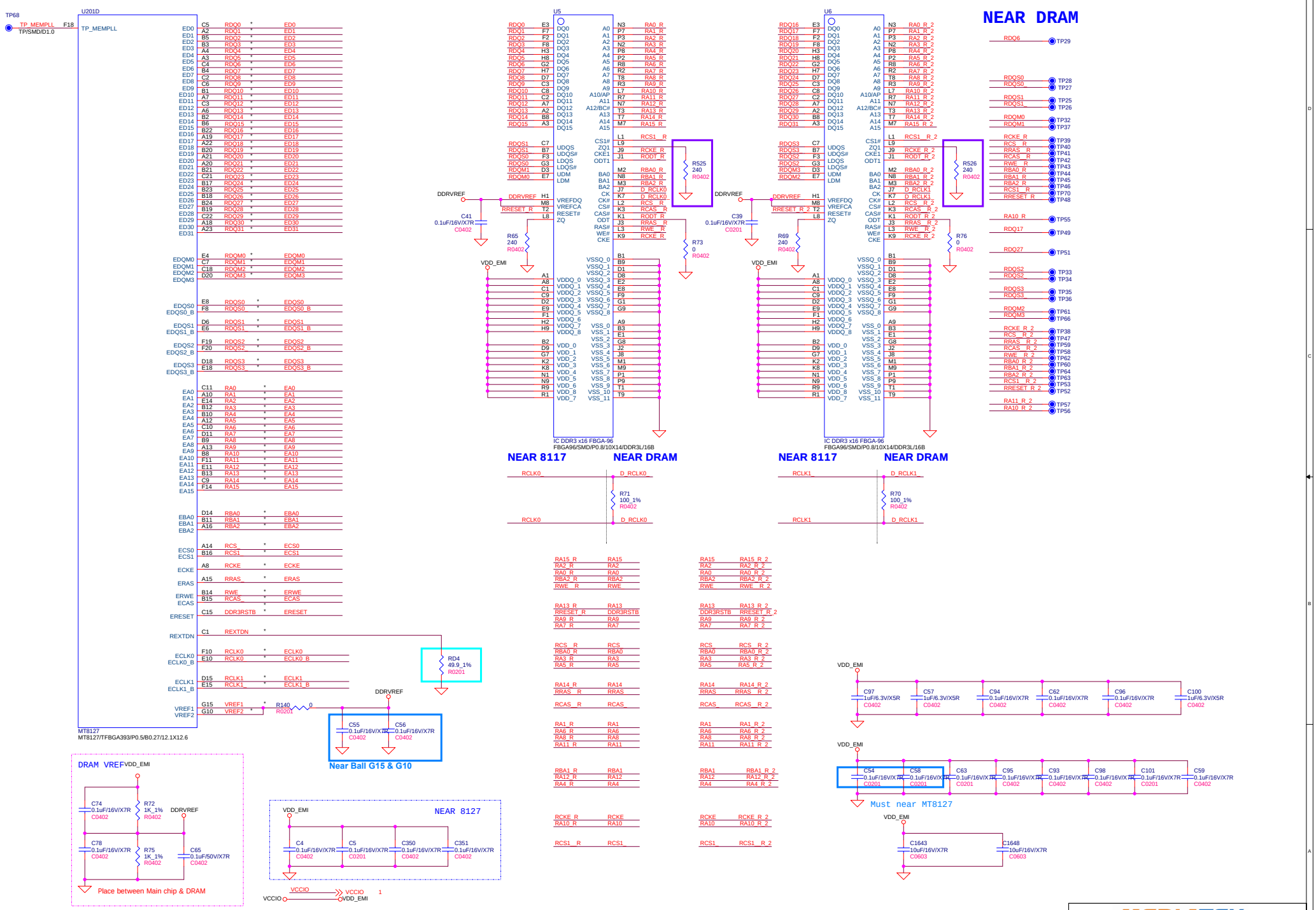
NEAR DRAM
U201D
TP68
TP_MEMPLL
TP/SMD/D1.0
MT8127
MT8127/TFBGA393/P0.5/B0.27/12.1X12.6
U5
U6
IC DDR3 x16 FBGA-96
FBGA96/SMD/P0.8/10X14/DDR3L/16B
NEAR 8117
NEAR DRAM
DDRVREF
VDD_EMI
R525 240 R0402
R526 240 R0402
R73 0 R0402
R76 0 R0402
R65 240 R0402
R69 240 R0402
C41 0.1uF/16V/X7R C0402
C39 0.1uF/16V/X7R C0201
RCLK0_
D_RCLK0_
R71 100_1% R0402
RCLK1_
D_RCLK1_
R70 100_1% R0402
RD4 49.9_1% R0201
R140 0 R0201
C55 0.1uF/16V/X7R C0402
C56 0.1uF/16V/X7R C0402
Near Ball G15 & G10
DRAM VREF
C74 0.1uF/16V/X7R C0402
R72 1K_1% R0402
C78 0.1uF/16V/X7R C0402
R75 1K_1% R0402
C65 0.1uF/50V/X7R C0402
Place between Main chip & DRAM
NEAR 8127
C4 0.1uF/16V/X7R C0402
C5 0.1uF/16V/X7R C0201
C350 0.1uF/16V/X7R C0402
C351 0.1uF/16V/X7R C0402
VCCIO
VDD_EMI
C97 1uF/6.3V/X5R C0402
C57 1uF/6.3V/X5R C0402
C94 0.1uF/16V/X7R C0402
C62 0.1uF/16V/X7R C0402
C96 0.1uF/16V/X7R C0402
C100 1uF/6.3V/X5R C0402
C54 0.1uF/16V/X7R C0201
C58 0.1uF/16V/X7R C0201
C63 0.1uF/16V/X7R C0201
C95 0.1uF/16V/X7R C0402
C93 0.1uF/16V/X7R C0402
C98 0.1uF/16V/X7R C0402
C101 0.1uF/16V/X7R C0201
C59 0.1uF/16V/X7R C0402
Must near MT8127
C1643 10uF/16V/X7R C0603
C1648 10uF/16V/X7R C0603
MEDIATEK
Title
06 Memory
Size C
Document Number
MT8127 TABLET
Rev V1.0
Date: Wednesday, April 30, 2014
Sheet 6 of 18

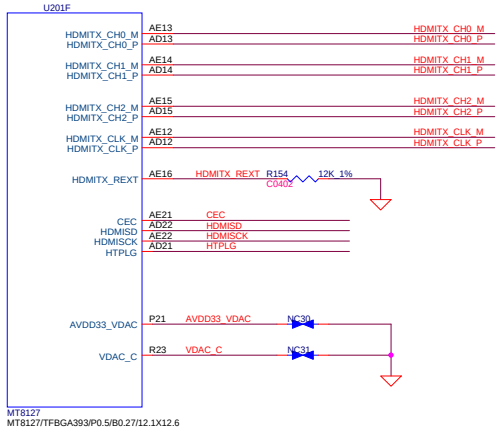

HDMI TYPE D(micro)

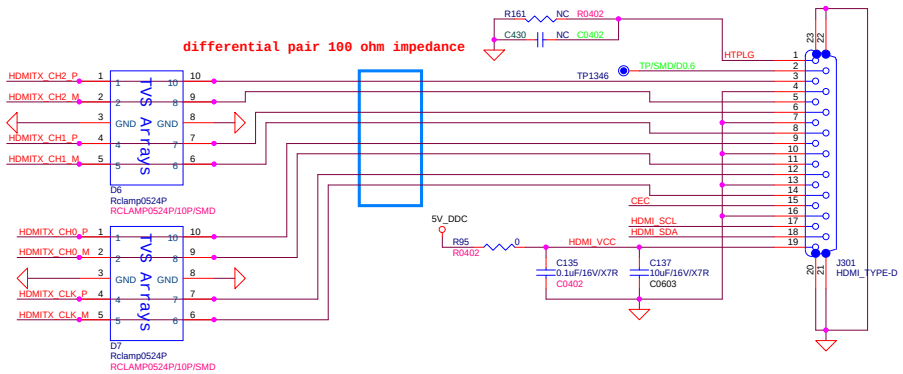

HDMI TYPE A

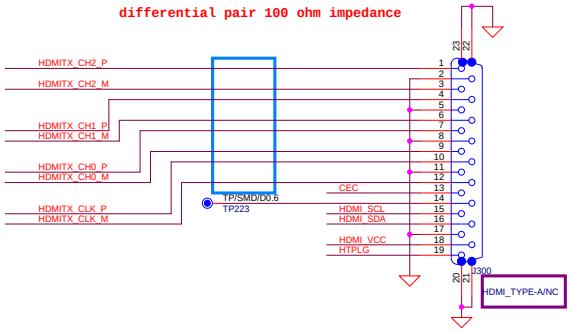

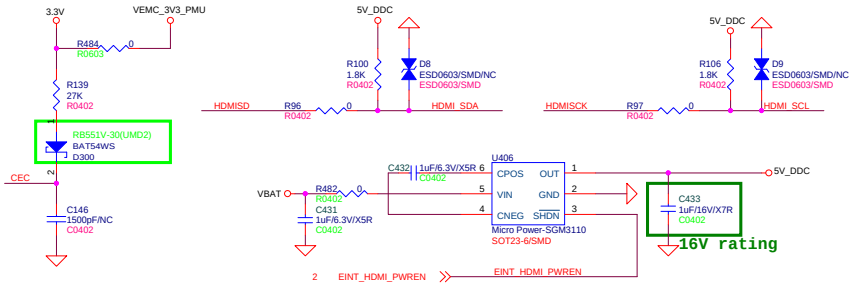

MEDIATEK

Title	07 HDMI	
Size C	Document Number MT8127 Tablet	Rev V1.0
Date: Wednesday, April 30, 2014	Sheet 7 of 18	

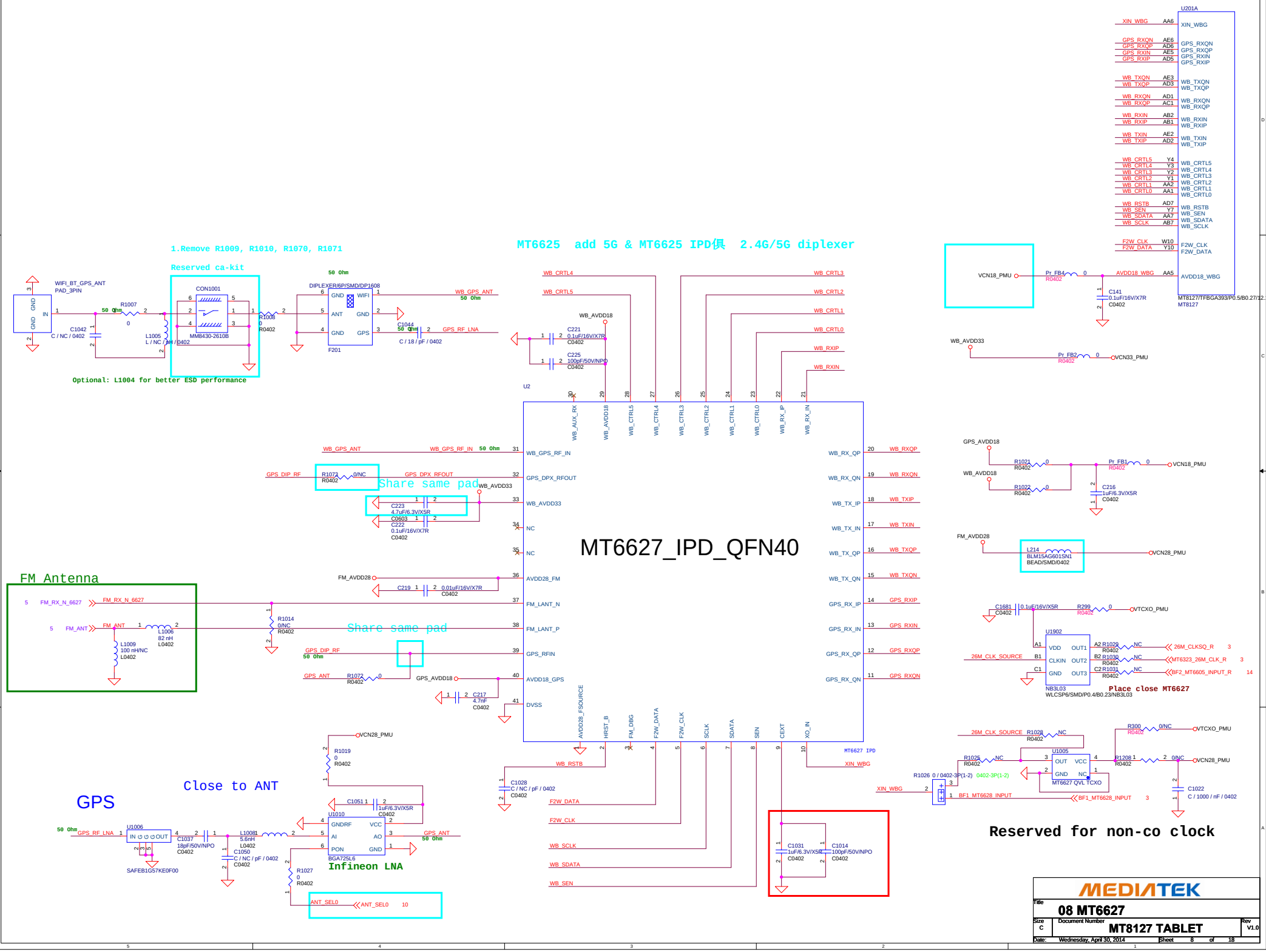
MT6625 add 5G & MT6625 IPD俱 2.4G/5G diplexer
1.Remove R1009, R1010, R1070, R1071
Reserved ca-kit
WIFI_BT_GPS_ANT
PAD_3PIN
CON1001
MM8430-2610B
DIPLEXER/6P/SMD/DP1608
F201
WB_GPS_ANT
50 Ohm
GPS_RF_LNA
C / 18 / pF / 0402
Optional: L1004 for better ESD performance
U201A
MT8127/TFBGA393/P0.5/B0.27/12.1X12.6
MT8127
VCN18_PMU
Pr_FB4
AVDD18_WBG
VCN33_PMU
Pr_FB2
U2
MT6627_IPD_QFN40
WB_GPS_RF_IN
GPS_DPX_RFOUT
WB_AVDD33
NC
AVDD28_FM
FM_LANT_N
FM_LANT_P
GPS_RFIN
AVDD18_GPS
DVSS
WB_RX_QP
WB_RX_QN
WB_TX_IP
WB_TX_IN
WB_TX_QP
WB_TX_QN
GPS_RX_IP
GPS_RX_IN
GPS_RX_QP
GPS_RX_QN
WB_RXQP
WB_RXQN
WB_TXIP
WB_TXIN
WB_TXQP
WB_TXQN
GPS_RXIP
GPS_RXIN
GPS_RXQP
GPS_RXQN
Share same pad
GPS_DIP_RF
GPS_ANT
GPS_AVDD18
FM_AVDD28
VCN18_PMU
VCN28_PMU
VTCXO_PMU
FM Antenna
FM_RX_N_6627
FM_ANT
L1009
100 nH/NC
L0402
L1006
82 nH
L0402
R1014
0/NC
R0402
GPS
Close to ANT
U1006
SAFEB1G57KE0F00
L1008
5.6nH
L0402
U1010
BGA725L6
Infineon LNA
ANT_SEL0
MT6627 IPD
XIN_WBG
U1902
NB3L03
WLCSP6/SMD/P0.4/B0.23/NB3L03
26M_CLKSQ_R
MT6323_26M_CLK_R
BF2_MT6605_INPUT_R
Place close MT6627
26M_CLK_SOURCE
U1005
MT6627 QVL TCXO
BF1_MT6628_INPUT
Reserved for non-co clock
MEDIATEK
Title
08 MT6627
Size
C
Document Number
MT8127 TABLET
Rev
V1.0
Date: Wednesday, April 30, 2014
Sheet 8 of 18

eMMC

1. VCC : Core Voltage 2.7v ~ 3.6v
2. VCCQ : IO Voltage 1.7v~1.95v (low voltage range)
   2.7v~3.6v(high voltage range)

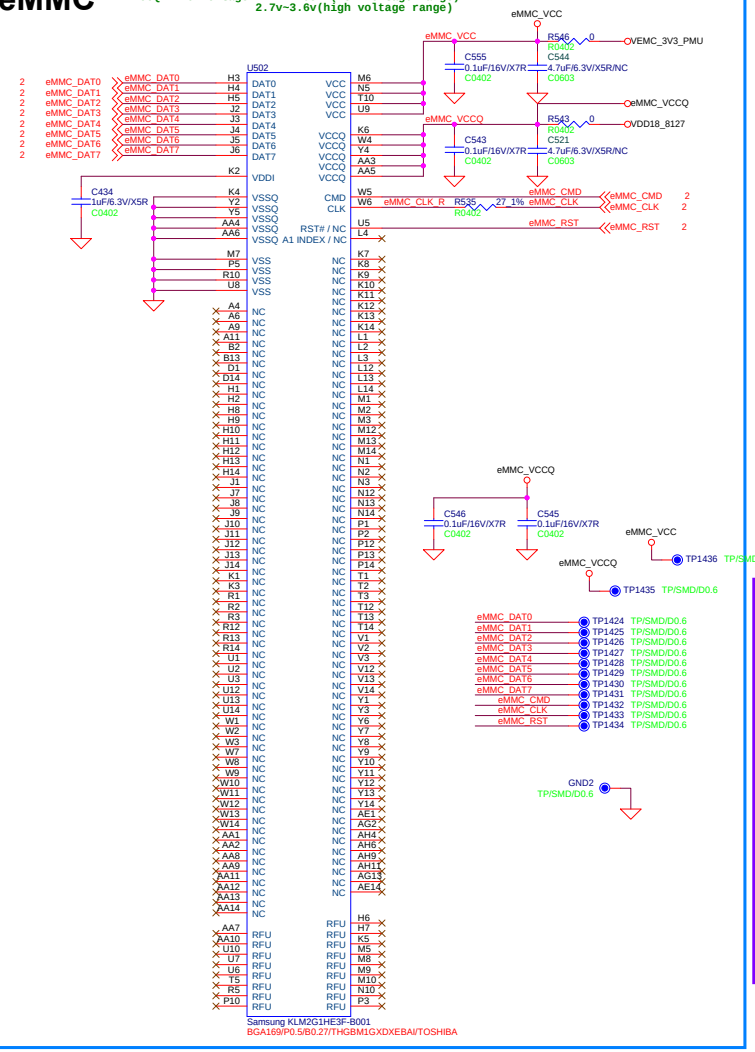

NAND Flash

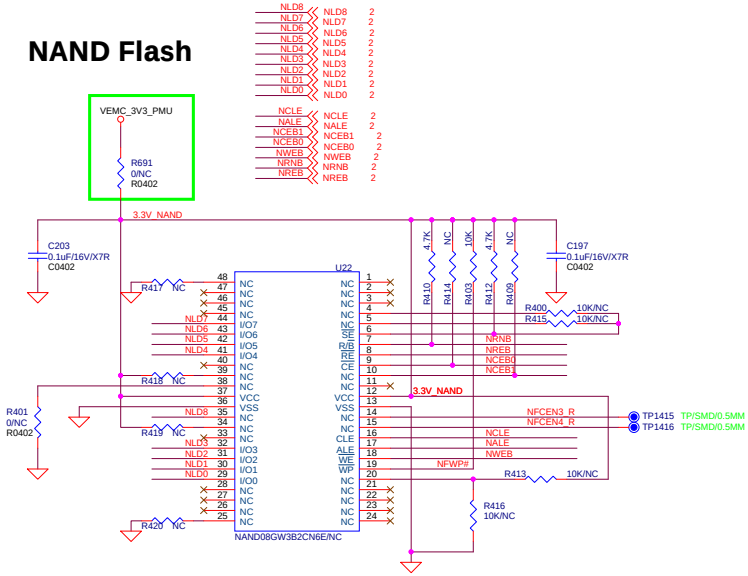

SD CARD 1

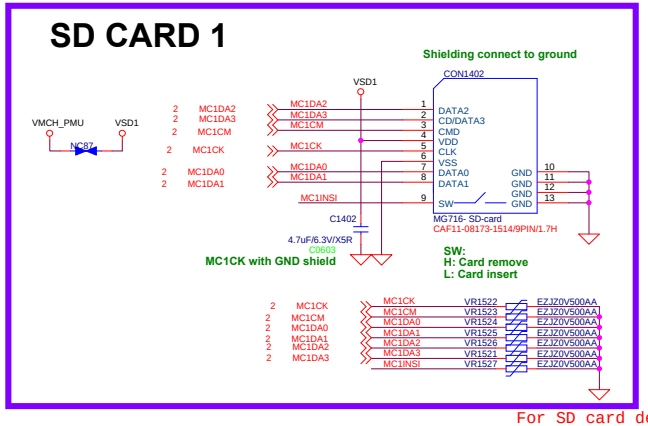

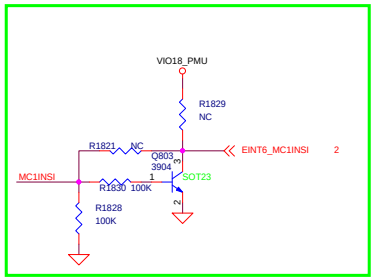

For SD card detect control:
No card, MC1INSI_R floating (PD), EINT9 --> High
with card, MC1INSI_R PU to VDD, EINT9 --> Low

MEDIATEK
No. 1, Dusing Rd. 1, Hsinchu Science Park
Hsin-Chu City, Taiwan 300. R.O.C.
TEL: +886-3-567-0766 FAX:+886-3-578-7610

Title	09 eMMC/NAND/SD Card	
Size C	Document Number MT8127 TABLET	Rev 1.0
Date: Wednesday, April 30, 2014	Sheet 9 of 18	

MIPI or LVDS (CON904)

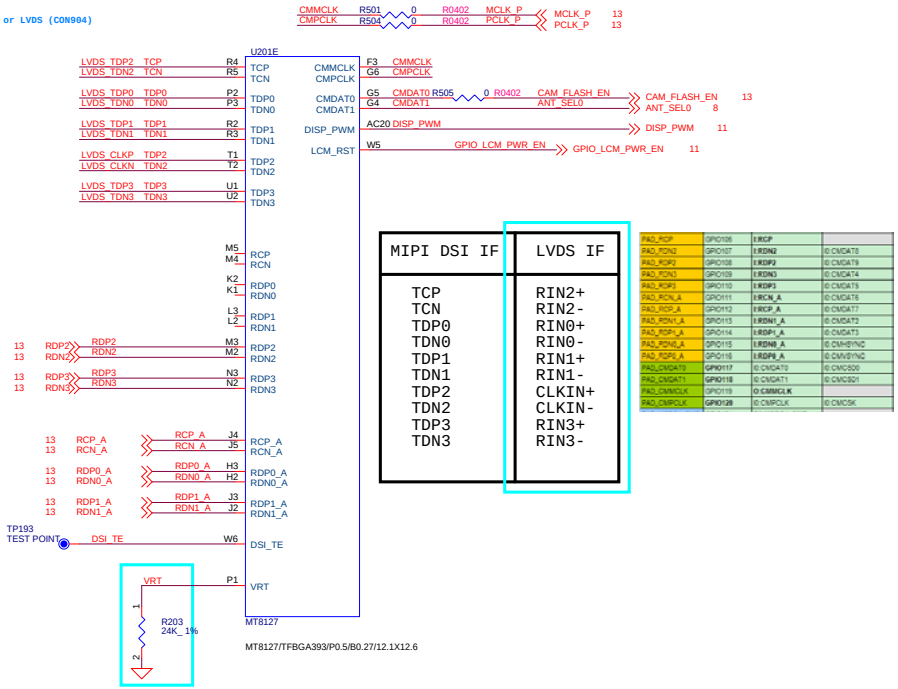

MIPI DSI IF	LVDS IF
TCP	RIN2+
TCN	RIN2-
TDP0	RIN0+
TDN0	RIN0-
TDP1	RIN1+
TDN1	RIN1-
TDP2	CLKIN+
TDN2	CLKIN-
TDP3	RIN3+
TDN3	RIN3-

PAD_RCP	GPIO106	I:RCP	
PAD_RCN2	GPIO107	I:RCN2	O:CMDAT8
PAD_RDP2	GPIO108	I:RDP2	O:CMDAT9
PAD_RDN3	GPIO109	I:RDN3	O:CMDAT4
PAD_RDP3	GPIO110	I:RDP3	O:CMDAT5
PAD_RCN_A	GPIO111	I:RCN_A	O:CMDAT6
PAD_RCP_A	GPIO112	I:RCP_A	O:CMDAT7
PAD_RDN1_A	GPIO113	I:RDN1_A	O:CMDAT2
PAD_RDP1_A	GPIO114	I:RDP1_A	O:CMDAT3
PAD_RDN0_A	GPIO115	I:RDN0_A	O:CMHSYNC
PAD_RDP0_A	GPIO116	I:RDP0_A	O:CMVSYNC
PAD_CMDAT0	GPIO117	O:CMDAT0	O:CMCSD0
PAD_CMDAT1	GPIO118	O:CMDAT1	O:CMCSD1
PAD_CMMCLK	GPIO119	O:CMMCLK	
PAD_CMPCLK	GPIO120	O:CMPCLK	O:CMCSK

MG916 LCD Connector (1280*800 LVDS)

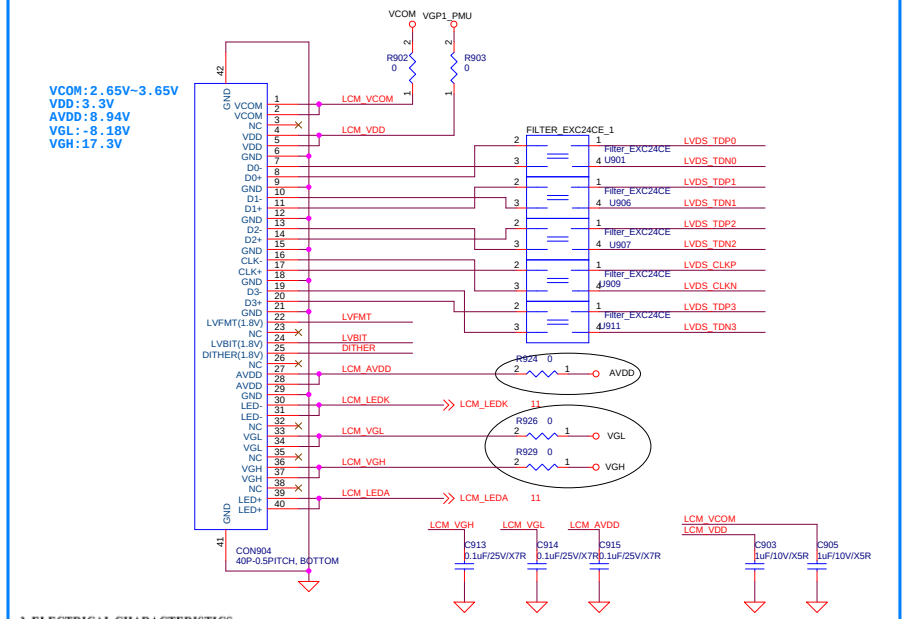

3. ELECTRICAL CHARACTERISTICS

(A) TFT LCD

ITEM	SYMBOL	MIN	TYP	MAX	UNIT	NOTE
Power Voltage	VDD	3	3.3	3.6	V	*1)
LED Voltage	VLED	2.5	3.3	5.5	V	
Rush Current	Irush	-	-	2	A	*4)
VDD Current	IDD	-	-	155	mA	
LED Current	ILED		500		mA	

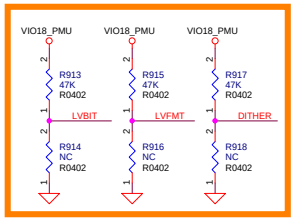

MEDIATEK

Title: 10 LCD		
Size: C	Document Number: MT8127 TABLET	Rev: V1.0
Date: Wednesday, April 30, 2014	Sheet 10 of 18	

LCD POWER

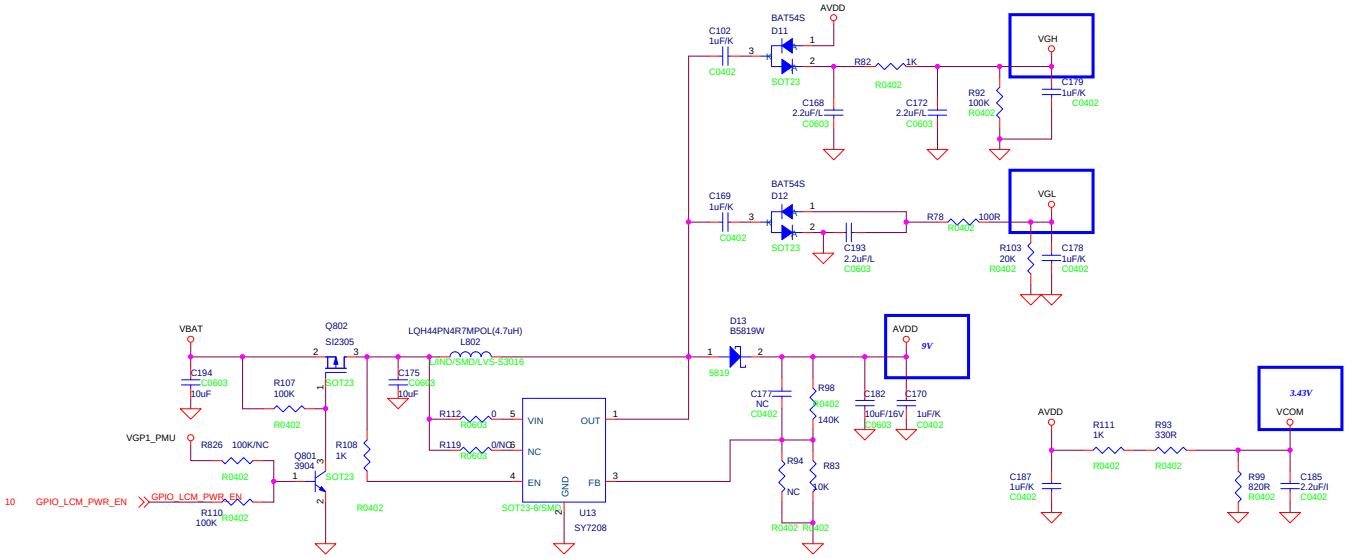

LED Backlight Driver

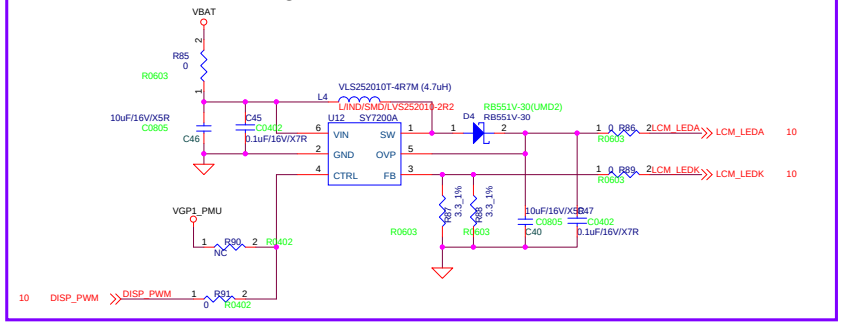

MEDIATEK

Title		
11 LCM power		
Size C	Document Number MT8127 TABLET	Rev V1.0
Date: Wednesday, April 30, 2014	Sheet 11 of 18	

CTP COB interface

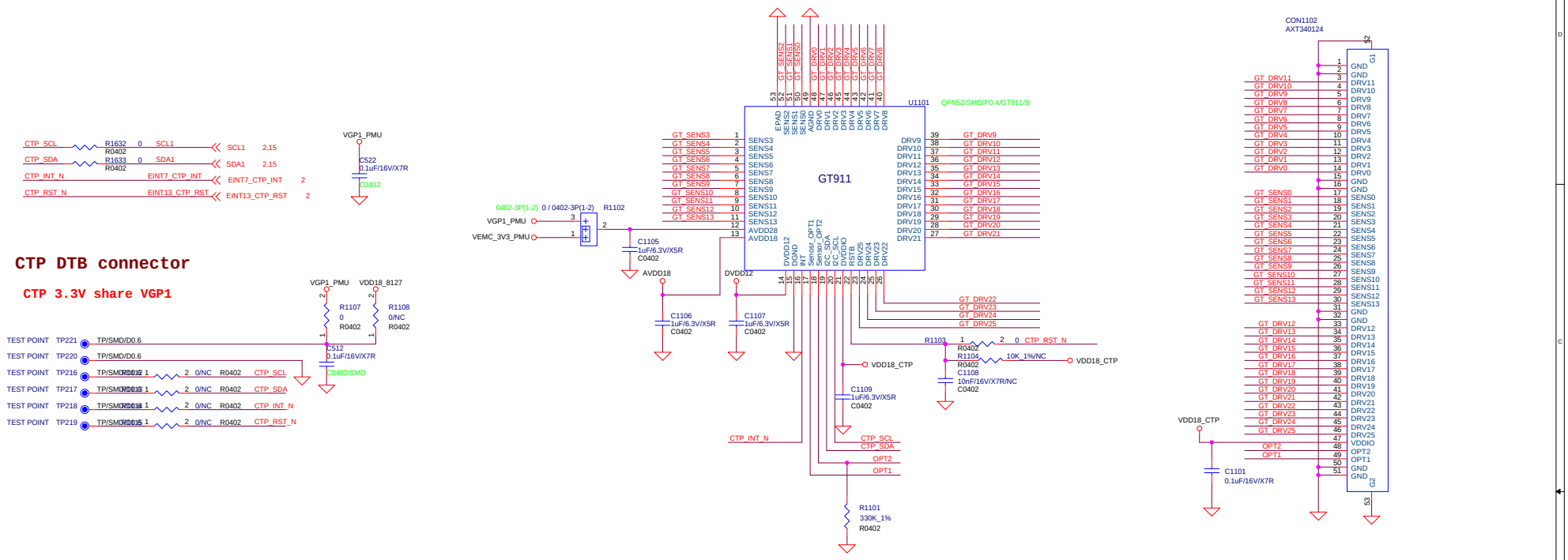

MEDIATEK

Title		
12 CTP		
Size C	Document Number MT8127 TABLET	Rev V1.0
Date: Wednesday, April 30, 2014	Sheet 12 of 18	

PAD_RCP	GPIO106	I:RCP	
PAD_RDN2	GPIO107	I:RDN2	O:CMDAT8
PAD_RDP2	GPIO108	I:RDP2	O:CMDAT9
PAD_RDN3	GPIO109	I:RDN3	O:CMDAT4
PAD_RDP3	GPIO110	I:RDP3	O:CMDAT5
PAD_RCN_A	GPIO111	I:RCN_A	O:CMDAT6
PAD_RCP_A	GPIO112	I:RCP_A	O:CMDAT7
PAD_RDN1_A	GPIO113	I:RDN1_A	O:CMDAT2
PAD_RDP1_A	GPIO114	I:RDP1_A	O:CMDAT3
PAD_RDN0_A	GPIO115	I:RDN0_A	O:CMHSYNC
PAD_RDP0_A	GPIO116	I:RDP0_A	O:CMVSYNC
PAD_CMDAT9	GPIO117	O:CMDAT9	O:CMCSDI
PAD_CMDAT1	GPIO118	O:CMDAT1	O:CMCSDI
PAD_CMMCLK	GPIO119	O:CMMCLK	
PAD_CMPCLK	GPIO120	O:CMPCLK	O:CMCSK

10 RDP2 — RDP2 — CMDAT9
10 RDN2 — RDN2 — CMDAT8

10 RDP3 — RDP3 — CMDAT5
10 RDN3 — RDN3 — CMDAT4

10 RCP_A — RCP_A — CMDAT7
10 RCN_A — RCN_A — CMDAT6

10 RDP0_A — RDP0_A — CMVSYNC
10 RDN0_A — RDN0_A — CMHSYNC

10 RDP1_A — RDP1_A — CMDAT3
10 RDN1_A — RDN1_A — CMDAT2

2 MC_CMRST — MC_CMRST
2 MC_CMPDN — MC_CMPDN
2 SUB_CMRST — SUB_CMRST
2 SUB_CMPDN — SUB_CMPDN

MG716 Parallel IF

Camera

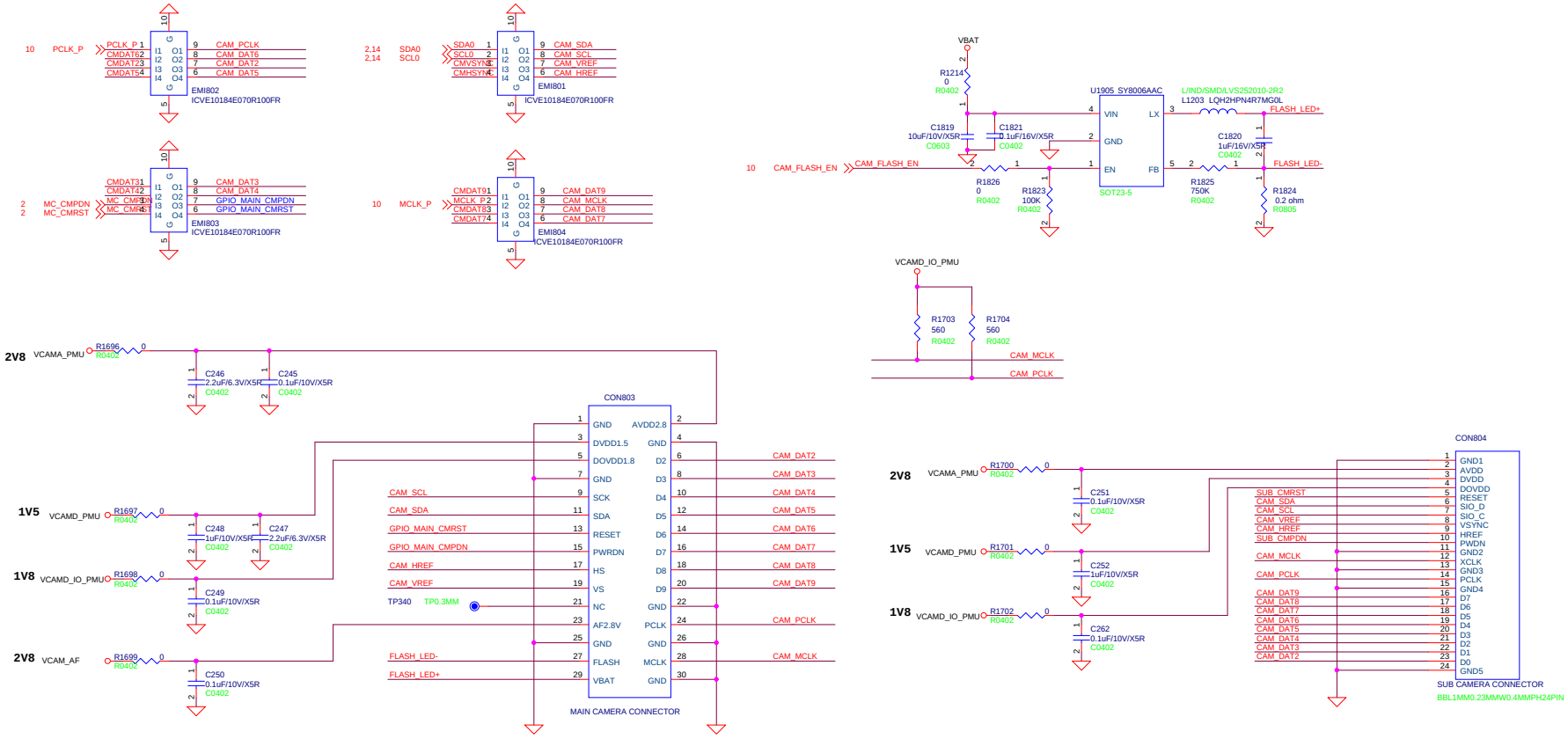

MEDIATEK

Title	13 Camera		
Size C	Document Number MT8127 TABLET		Rev V1.0
Date: Wednesday, April 30, 2014	Sheet 13 of 18		

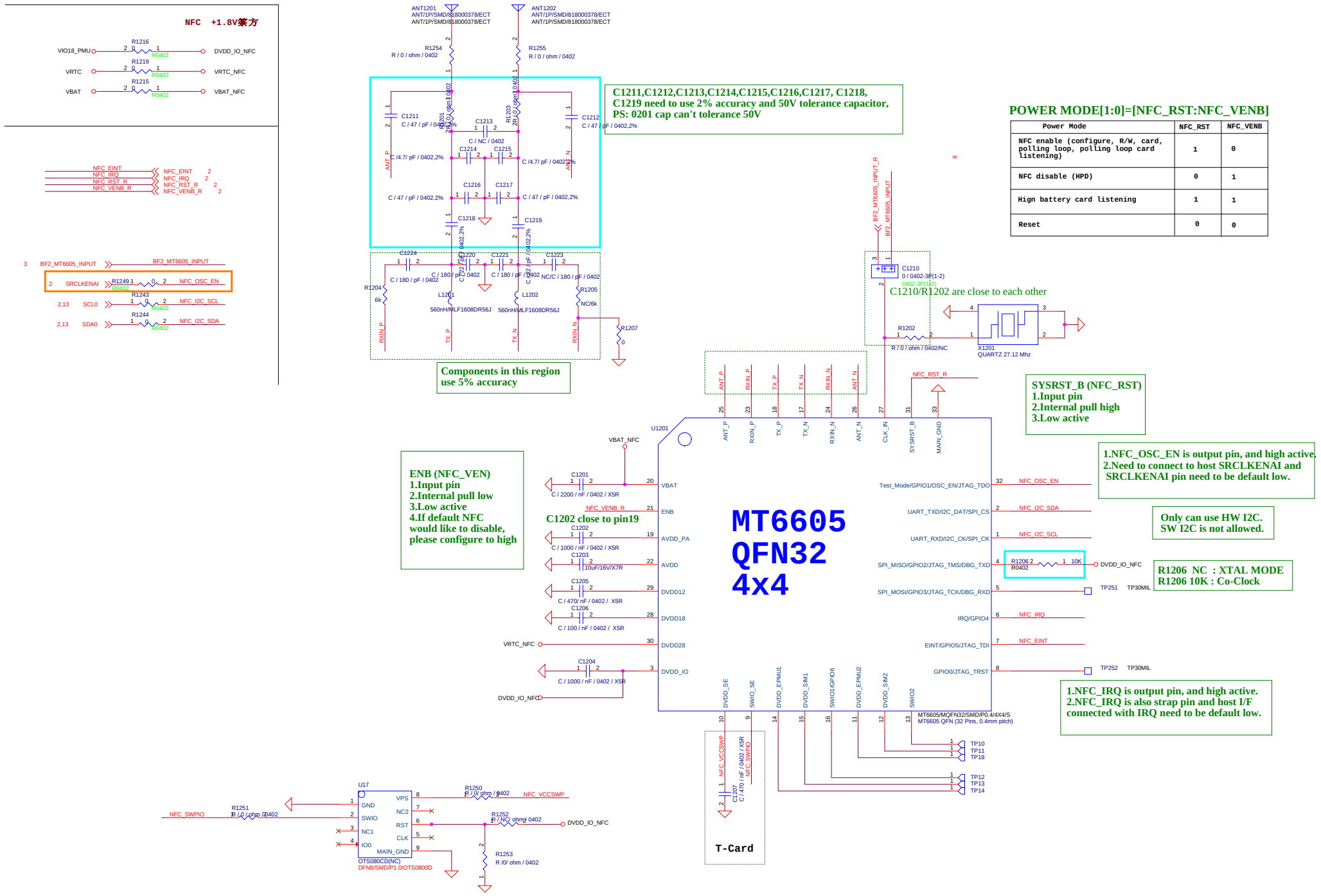
NFC +1.8V案方
VIO18_PMU
R1216
R0402
DVDD_IO_NFC
VRTC
R1219
VRTC_NFC
VBAT
R1215
VBAT_NFC
NFC_EINT
NFC_IRQ
NFC_RST_R
NFC_VENB_R
BF2_MT6605_INPUT
SRCLKENAI
R1249
NFC_OSC_EN
SCL0
R1243
NFC_I2C_SCL
SDA0
R1244
NFC_I2C_SDA
ANT1201
ANT/1P/SMD/818000378/ECT
ANT1202
R1254
R / 0 / ohm / 0402
R1255
C1211,C1212,C1213,C1214,C1215,C1216,C1217, C1218,
C1219 need to use 2% accuracy and 50V tolerance capacitor,
PS: 0201 cap can't tolerance 50V
C1211
C / 47 / pF / 0402,2%
C1212
C1213
C / NC / 0402
C1214
C1215
C /4.7/ pF / 0402,2%
C1216
C1217
C1218
C1219
ANT_P
ANT_N
C1224
C1220
C1221
C1223
C / 180 / pF / 0402
NC/C / 180 / pF / 0402
R1204
6k
L1201
560nH/MLF1608DR56J
L1202
R1205
NC/6k
R1207
RXIN_P
TX_P
TX_N
RXIN_N
Components in this region
use 5% accuracy
POWER MODE[1:0]=[NFC_RST:NFC_VENB]
Power Mode | NFC_RST | NFC_VENB
NFC enable (configure, R/W, card, polling loop, polling loop card listening) | 1 | 0
NFC disable (HPD) | 0 | 1
Hign battery card listening | 1 | 1
Reset | 0 | 0
BF2_MT6605_INPUT_R
C1210
0 / 0402-3P(1-2)
0402-3P(1-2)
C1210/R1202 are close to each other
R1202
R / 0 / ohm / 0402/NC
X1201
QUARTZ 27.12 Mhz
NFC_RST_R
SYSRST_B (NFC_RST)
1.Input pin
2.Internal pull high
3.Low active
U1201
VBAT_NFC
C1201
C / 2200 / nF / 0402 / X5R
VBAT
ENB (NFC_VEN)
1.Input pin
2.Internal pull low
3.Low active
4.If default NFC
would like to disable,
please configure to high
NFC_VENB_R
ENB
C1202 close to pin19
C1202
C / 1000 / nF / 0402 / X5R
AVDD_PA
C1203
10uF/16V/X7R
AVDD
C1205
C / 470/ nF / 0402 / X5R
DVDD12
C1206
C / 100 / nF / 0402 / X5R
DVDD18
VRTC_NFC
DVDD28
C1204
C / 1000 / nF / 0402 / X5R
DVDD_IO
DVDD_IO_NFC
MT6605
QFN32
4x4
ANT_P
RXIN_P
TX_P
TX_N
RXIN_N
ANT_N
CLK_IN
SYSRST_B
MAIN_GND
Test_Mode/GPIO1/OSC_EN/JTAG_TDO
NFC_OSC_EN
UART_TXD/I2C_DAT/SPI_CS
NFC_I2C_SDA
UART_RXD/I2C_CK/SPI_CK
NFC_I2C_SCL
SPI_MISO/GPIO2/JTAG_TMS/DBG_TXD
R1206 2
R0402
1 10K
DVDD_IO_NFC
SPI_MOSI/GPIO3/JTAG_TCK/DBG_RXD
TP251
TP30MIL
IRQ/GPIO4
NFC_IRQ
EINT/GPIO5/JTAG_TDI
NFC_EINT
GPIO0/JTAG_TRST
TP252
TP30MIL
1.NFC_OSC_EN is output pin, and high active.
2.Need to connect to host SRCLKENAI and
SRCLKENAI pin need to be default low.
Only can use HW I2C.
SW I2C is not allowed.
R1206 NC : XTAL MODE
R1206 10K : Co-Clock
1.NFC_IRQ is output pin, and high active.
2.NFC_IRQ is also strap pin and host I/F
connected with IRQ need to be default low.
DVDD_SE
SWIO_SE
DVDD_EPMU1
DVDD_SIM1
SWIO1/GPIO6
DVDD_EPMU2
DVDD_SIM2
SWIO2
MT6605/MQFN32/SMD/P0.4/4X4/S
MT6605 QFN (32 Pins, 0.4mm pitch)
TP10
TP11
TP18
TP12
TP13
TP14
NFC_VCCSWP
C1207
C / 470 / nF / 0402 / X5R
NFC_SWPIO
T-Card
U17
GND
SWIO
NC1
IO0
VPS
NC2
RST
CLK
MAIN_GND
OTS080CD(NC)
DFN8/SMD/P1.0/OTS0800D
R1251
R / 0 / ohm / 0402
R1250
R / 0/ ohm / 0402
NFC_VCCSWP
R1252
R / NC/ ohm/ 0402
DVDD_IO_NFC
R1253
R /0/ ohm / 0402
MEDIATEK
Title
14 NFC MT6605
Size
C
Document Number
MT8127 TABLET
Rev
V1.0
Date:
Wednesday, April 30, 2014
Sheet
14
of
18

M-Sensor

AK09911

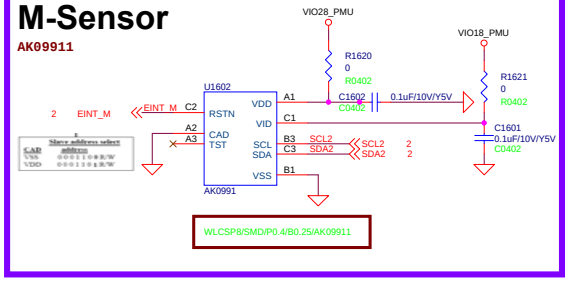

ALS Sensor

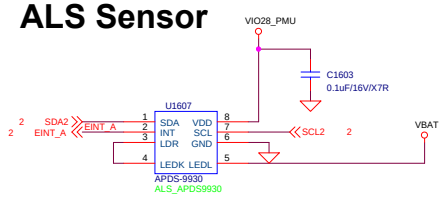

I2C Address: 0x10 (Write:0x20, Read:0x21)

G-Sensor

I2C mode

BMA2501 **I2C Address: 0x4C (Write:0x98, Read:0x99)**

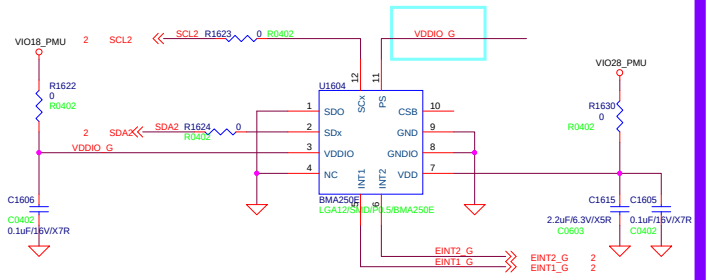

Gyro Sensor

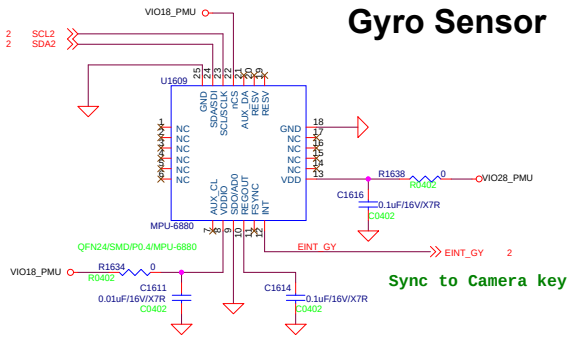

Sync to Camera key

I2C Address: 0x68 (Write:0xD0, Read:0xD1)

Hall-Sensor

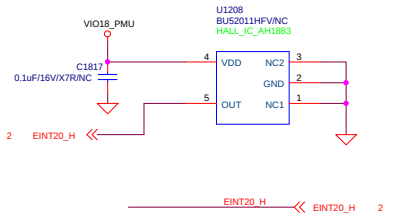

Thermal Sensor A

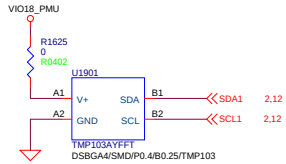

Common Debug

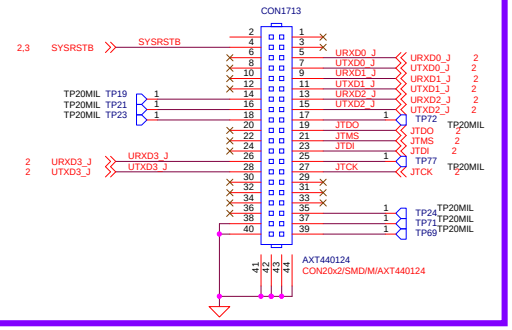

MEDIATEK

Title		
15 Sensors, Debug		
Size C	Document Number MT8127 TABLET	Rev V1.0
Date: Wednesday, April 30, 2014	Sheet 15 of 18	

MEDIATEK

Title: 16 Reserved

Size	Document Number	Rev
C	MT8127 Tablet	V1.0

Date: Wednesday, April 30, 2014 Sheet 16 of 18

Power Key

DO NOT put pull-up resistor on PWRKEY

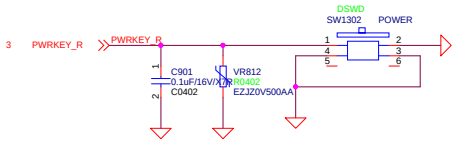

Shielding

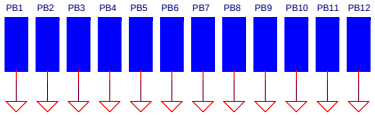

Volume Up

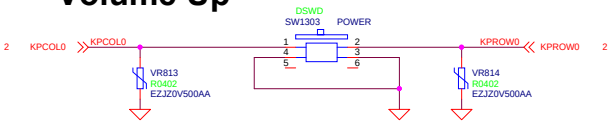

Volume Down

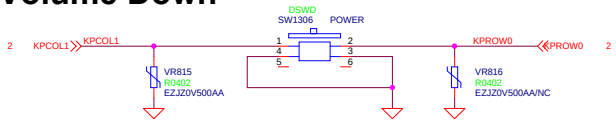

USB HS IF

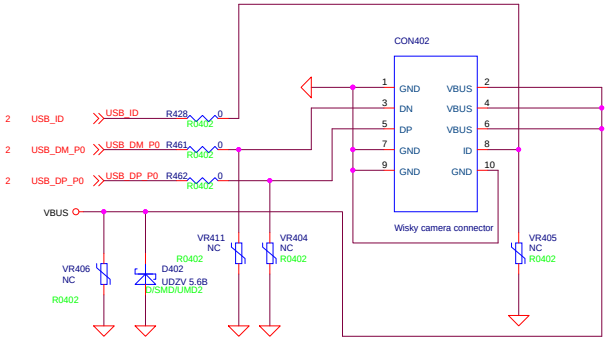

MEDIATEK

Title	17 Key, USB	
Size C	Document Number MT8127 TABLET	Rev V1.0
Date: Wednesday, April 30, 2014	Sheet 17 of 18	

MEDIATEK

Title

18 Change List

Size	Document Number	Rev
C	MT8127 TABLET	V1.0

Date: Wednesday, April 30, 2014 Sheet 18 of 18